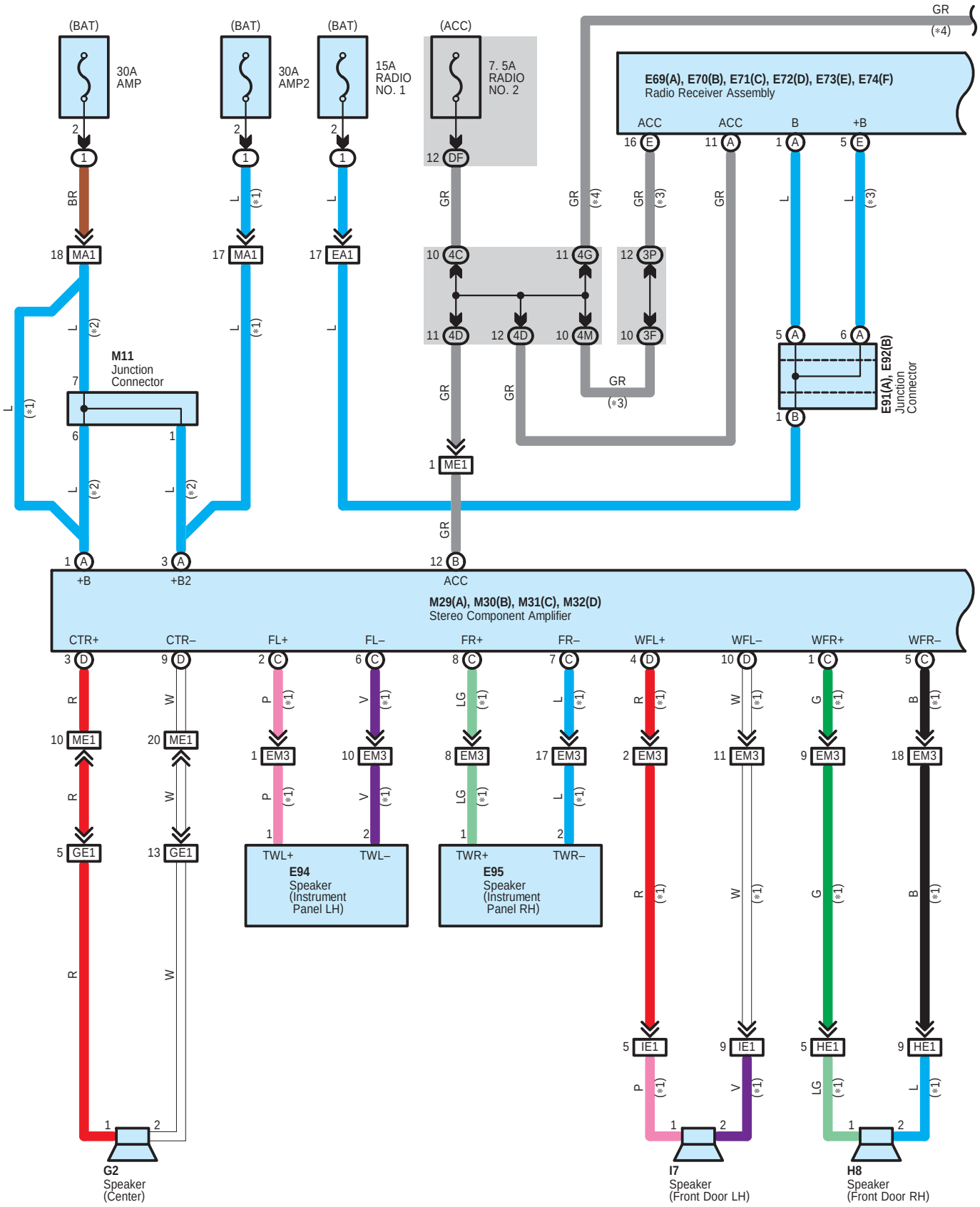
(BAT)
30A
AMP
(BAT)
30A
AMP2
(BAT)
15A
RADIO
NO. 1
(ACC)
7. 5A
RADIO
NO. 2
GR
(*4)
E69(A), E70(B), E71(C), E72(D), E73(E), E74(F)
Radio Receiver Assembly
ACC
ACC
B
+B
BR
L
(*1)
L
(*1)
L
GR
GR
(*4)
GR
(*3)
GR
L
L
(*3)
18 MA1
17 MA1
17 EA1
10 4C
11 4G
12 3P
11 4D
12 4D
10 4M
10 3F
M11
Junction
Connector
L
(*1)
L
(*2)
L
(*2)
GR
GR
GR
(*3)
E91(A), E92(B)
Junction
Connector
1 ME1
GR
+B
+B2
ACC
M29(A), M30(B), M31(C), M32(D)
Stereo Component Amplifier
CTR+
CTR–
FL+
FL–
FR+
FR–
WFL+
WFL–
WFR+
WFR–
R
W
P
(*1)
V
(*1)
LG
(*1)
L
(*1)
R
(*1)
W
(*1)
G
(*1)
B
(*1)
10 ME1
20 ME1
1 EM3
10 EM3
8 EM3
17 EM3
2 EM3
11 EM3
9 EM3
18 EM3
5 GE1
13 GE1
TWL+
TWL–
E94
Speaker
(Instrument
Panel LH)
TWR+
TWR–
E95
Speaker
(Instrument
Panel RH)
5 IE1
9 IE1
5 HE1
9 HE1
G2
Speaker
(Center)
I7
Speaker
(Front Door LH)
H8
Speaker
(Front Door RH)

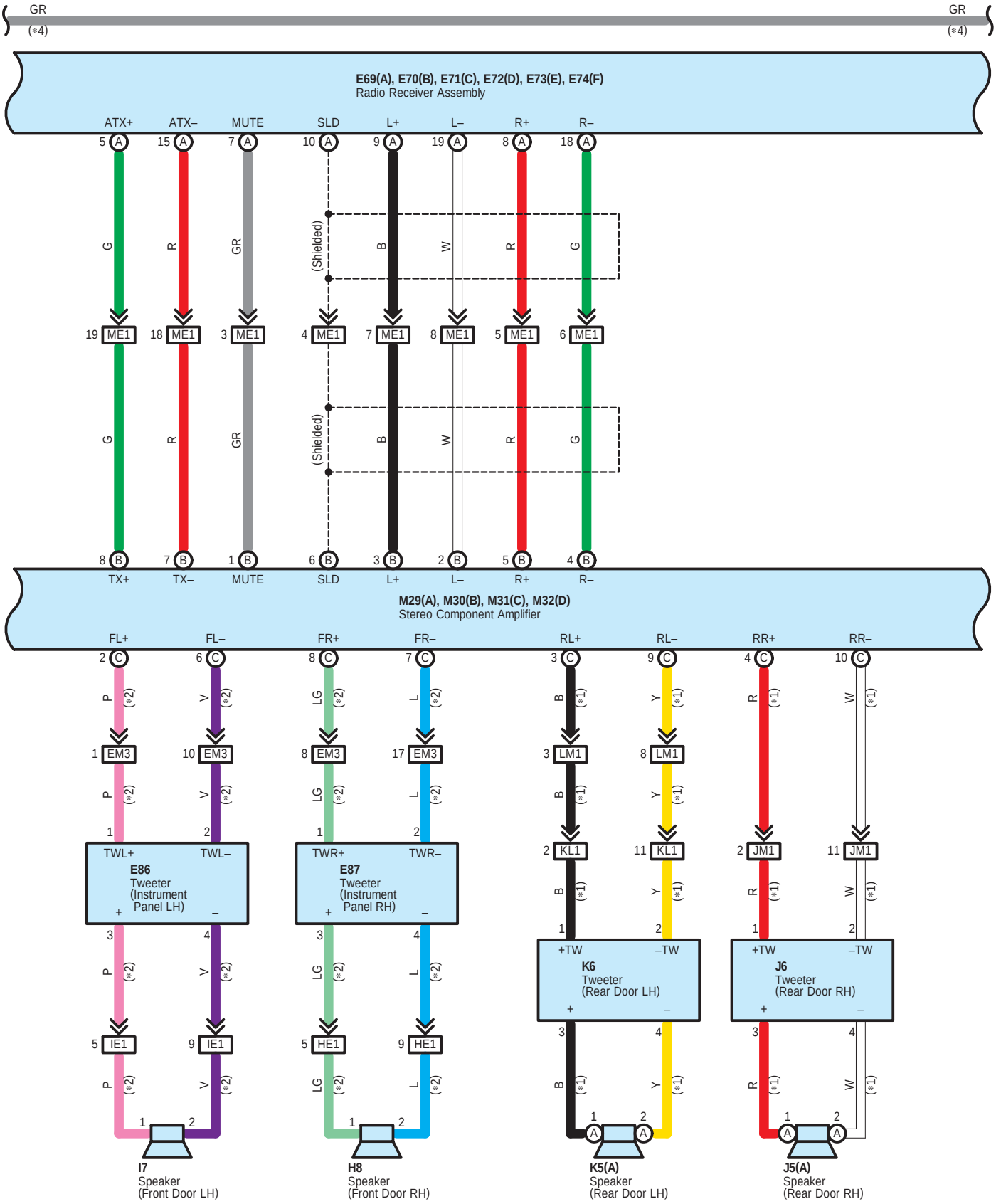

∗ 1 : 14 Speaker
∗ 2 : 8 Speaker
∗ 3 : w/ Bluetooth w/o LEXUS Navigation System
∗ 4 : w/ LEXUS Navigation System

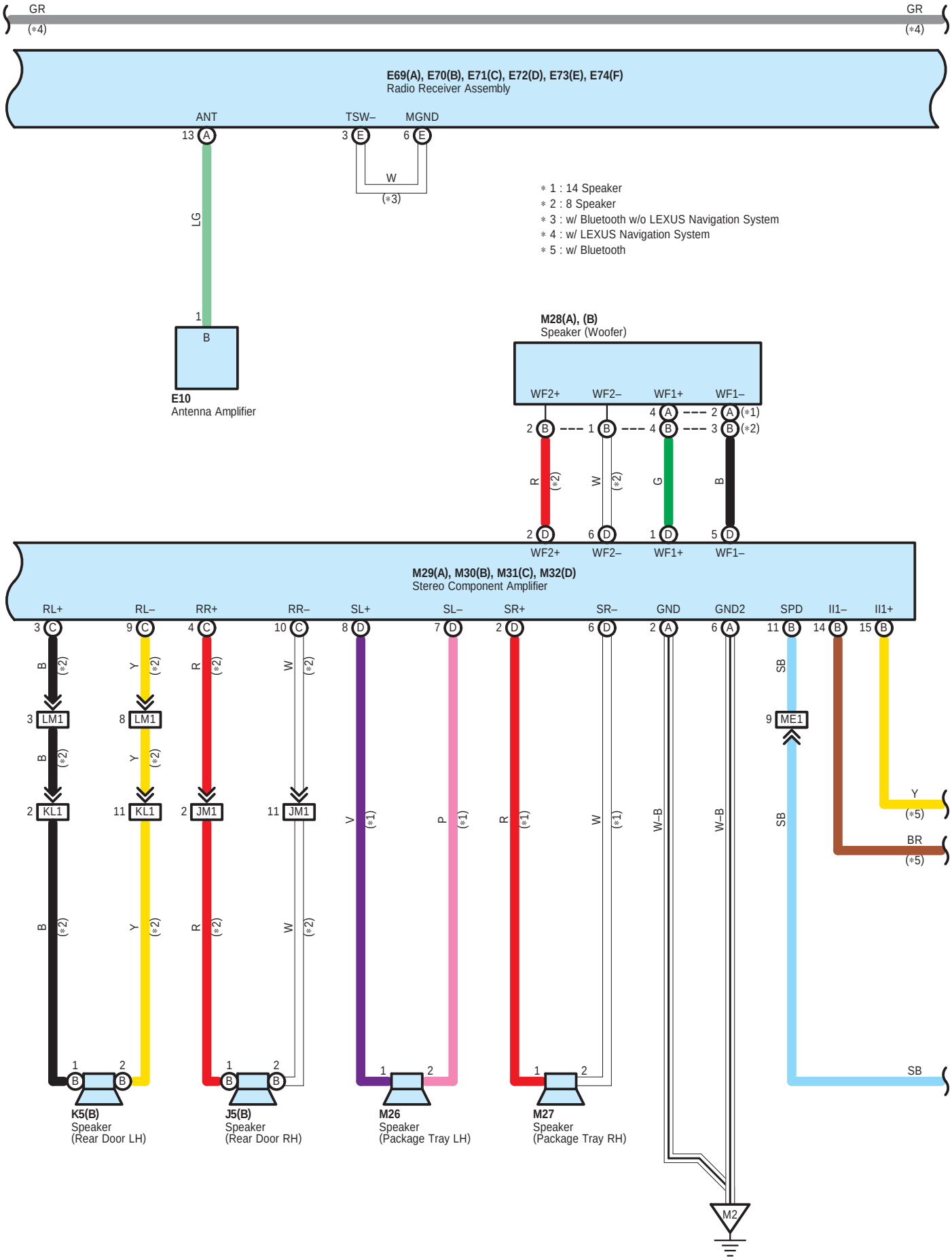
GR
(*4)
GR
(*4)
E69(A), E70(B), E71(C), E72(D), E73(E), E74(F)
Radio Receiver Assembly
ANT
TSW–
MGND
13 A
3 E
6 E
W
(*3)
LG
1
B
E10
Antenna Amplifier
* 1 : 14 Speaker
* 2 : 8 Speaker
* 3 : w/ Bluetooth w/o LEXUS Navigation System
* 4 : w/ LEXUS Navigation System
* 5 : w/ Bluetooth
M28(A), (B)
Speaker (Woofer)
WF2+
WF2–
WF1+
WF1–
4 A
2 A (*1)
2 B
1 B
4 B
3 B (*2)
R (*2)
W (*2)
G
B
2 D
6 D
1 D
5 D
WF2+
WF2–
WF1+
WF1–
M29(A), M30(B), M31(C), M32(D)
Stereo Component Amplifier
RL+
RL–
RR+
RR–
SL+
SL–
SR+
SR–
GND
GND2
SPD
II1–
II1+
3 C
9 C
4 C
10 C
8 D
7 D
2 D
6 D
2 A
6 A
11 B
14 B
15 B
B (*2)
Y (*2)
R (*2)
W (*2)
V (*1)
P (*1)
R (*1)
W (*1)
W–B
W–B
SB
3 LM1
8 LM1
9 ME1
B (*2)
Y (*2)
2 KL1
11 KL1
2 JM1
11 JM1
Y
(*5)
BR
(*5)
B (*2)
Y (*2)
R (*2)
W (*2)
SB
1
2
K5(B)
Speaker
(Rear Door LH)
J5(B)
Speaker
(Rear Door RH)
M26
Speaker
(Package Tray LH)
M27
Speaker
(Package Tray RH)
M2

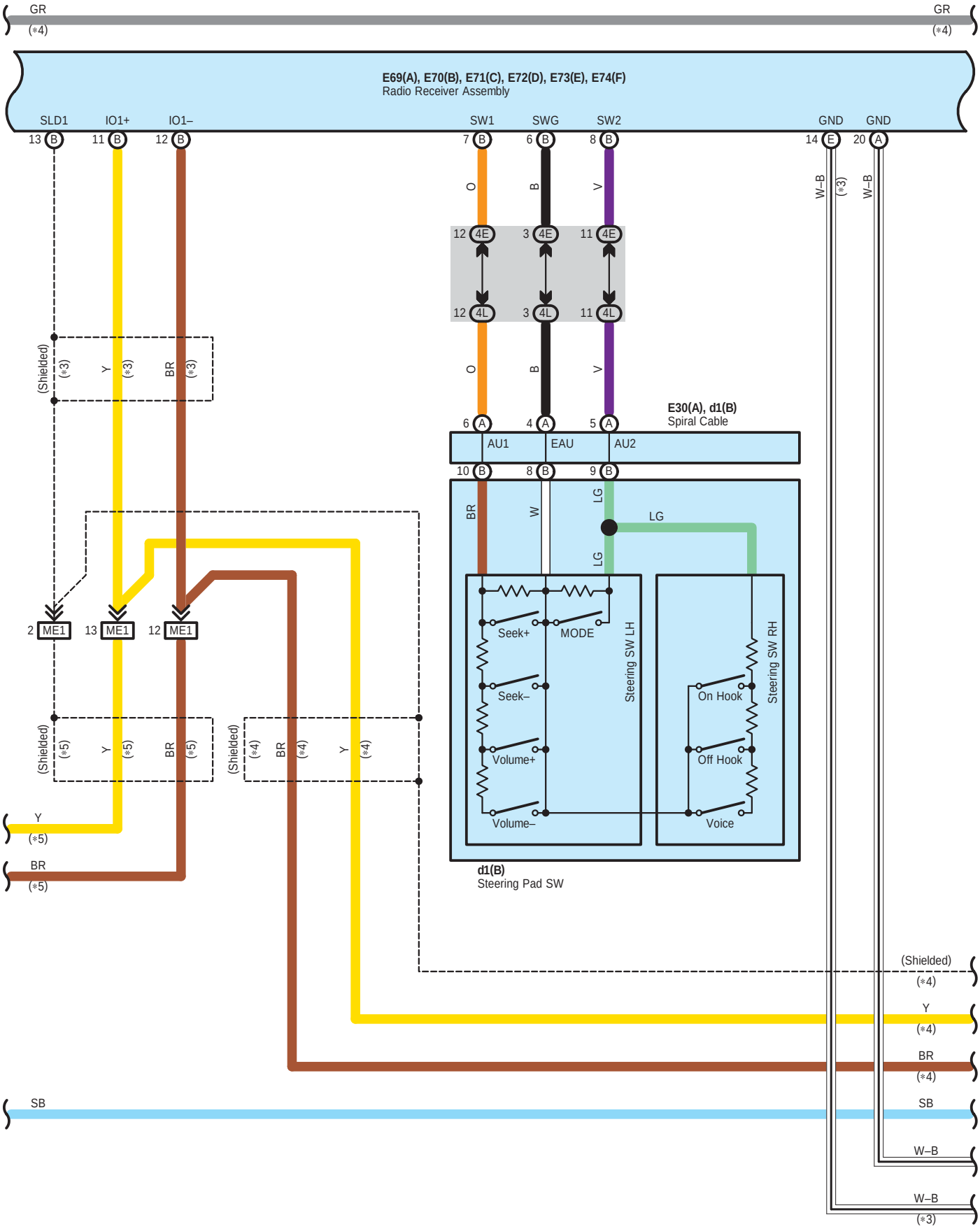
GR
(*4)
GR
(*4)
E69(A), E70(B), E71(C), E72(D), E73(E), E74(F)
Radio Receiver Assembly
SLD1
IO1+
IO1–
SW1
SWG
SW2
GND
GND
13 B
11 B
12 B
7 B
6 B
8 B
14 E
20 A
O
B
V
12 4E
3 4E
11 4E
12 4L
3 4L
11 4L
O
B
V
(Shielded)
(*3)
Y
(*3)
BR
(*3)
6 A
4 A
5 A
E30(A), d1(B)
Spiral Cable
AU1
EAU
AU2
10 B
8 B
9 B
BR
W
LG
LG
LG
2 ME1
13 ME1
12 ME1
Seek+
MODE
Seek–
Volume+
Volume–
Steering SW LH
On Hook
Off Hook
Voice
Steering SW RH
(Shielded)
(*5)
Y
(*5)
BR
(*5)
(Shielded)
(*4)
BR
(*4)
Y
(*4)
Y
(*5)
BR
(*5)
d1(B)
Steering Pad SW
W–B
(*3)
W–B
(Shielded)
(*4)
Y
(*4)
BR
(*4)
SB
SB
W–B
W–B
(*3)

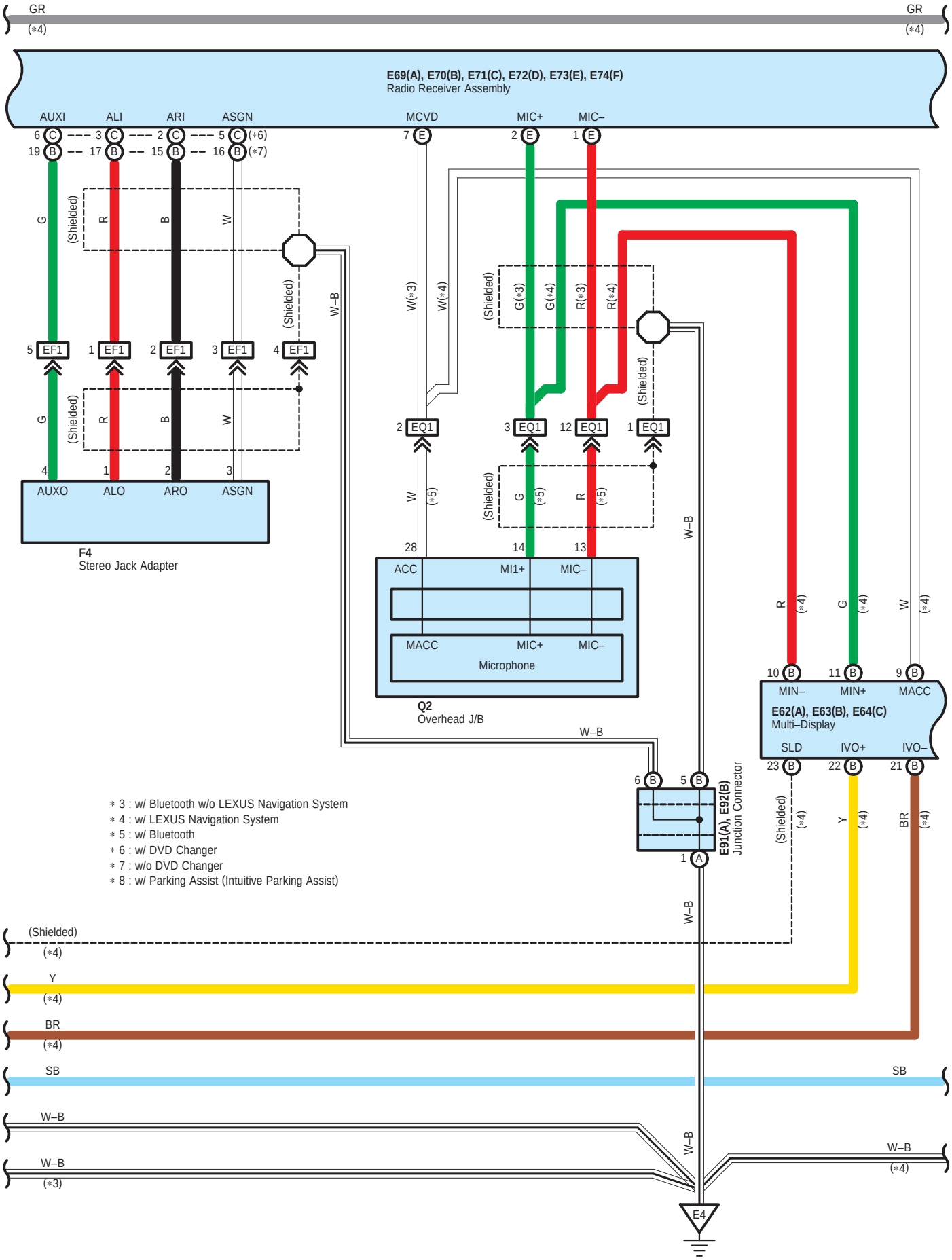
GR
(*4)
E69(A), E70(B), E71(C), E72(D), E73(E), E74(F)
Radio Receiver Assembly
AUXI
ALI
ARI
ASGN
MCVD
MIC+
MIC–
(Shielded)
W–B
EF1
EQ1
AUXO
ALO
ARO
F4
Stereo Jack Adapter
ACC
MI1+
MACC
Microphone
Q2
Overhead J/B
MIN–
MIN+
E62(A), E63(B), E64(C)
Multi–Display
SLD
IVO+
IVO–
E91(A), E92(B)
Junction Connector
E4
* 3 : w/ Bluetooth w/o LEXUS Navigation System
* 4 : w/ LEXUS Navigation System
* 5 : w/ Bluetooth
* 6 : w/ DVD Changer
* 7 : w/o DVD Changer
* 8 : w/ Parking Assist (Intuitive Parking Assist)
Y
BR
SB

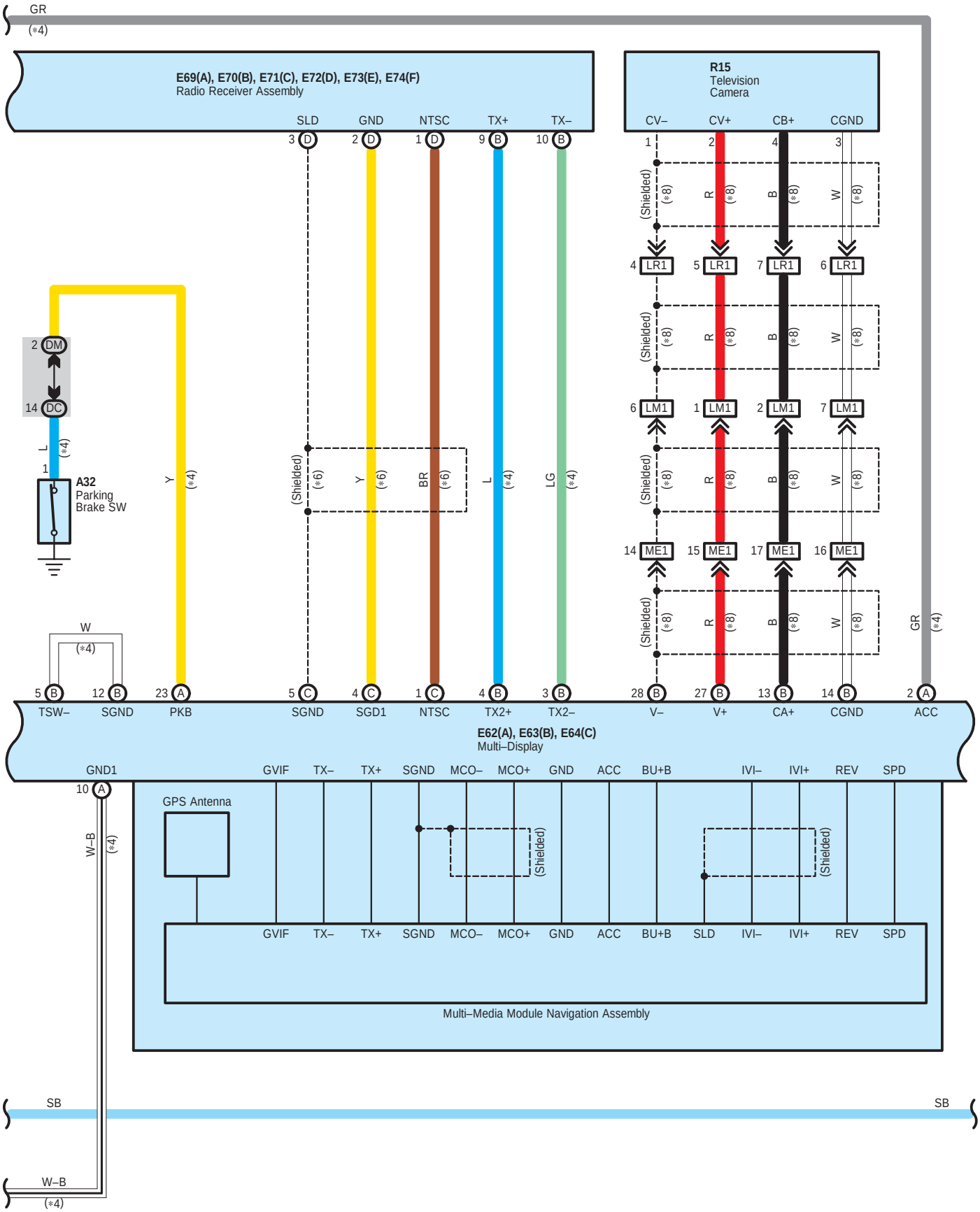
GR
(*4)
E69(A), E70(B), E71(C), E72(D), E73(E), E74(F)
Radio Receiver Assembly
SLD
GND
NTSC
TX+
TX–
R15
Television
Camera
CV–
CV+
CB+
CGND
(Shielded)
LR1
LM1
ME1
2 DM
14 DC
A32
Parking
Brake SW
W
(*4)
TSW–
SGND
PKB
SGND
SGD1
NTSC
TX2+
TX2–
V–
V+
CA+
CGND
ACC
E62(A), E63(B), E64(C)
Multi–Display
GND1
GVIF
TX–
TX+
SGND
MCO–
MCO+
GND
ACC
BU+B
IVI–
IVI+
REV
SPD
GPS Antenna
SLD
Multi–Media Module Navigation Assembly
SB
W–B

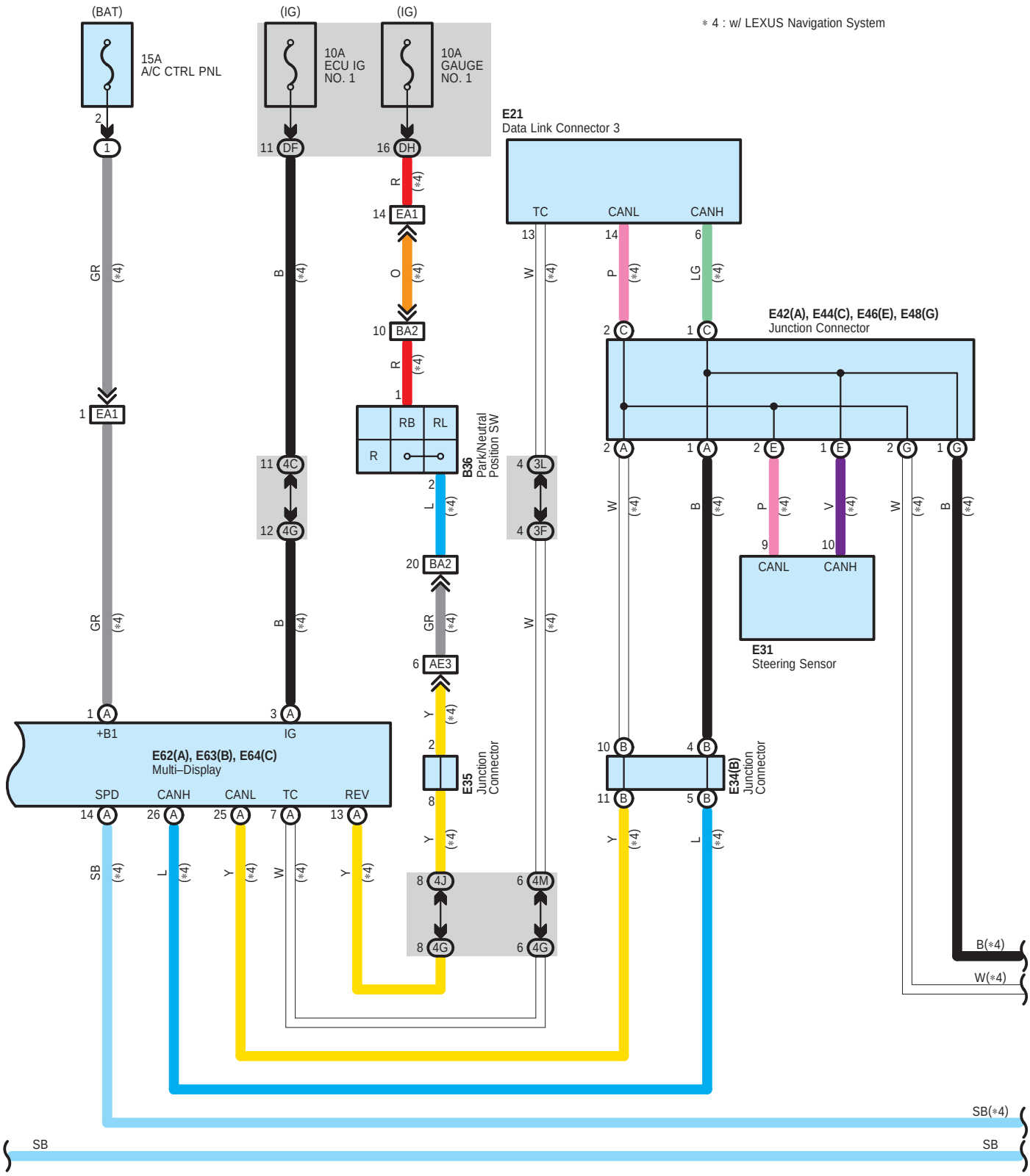
(BAT)
15A
A/C CTRL PNL
(IG)
10A
ECU IG
NO. 1
(IG)
10A
GAUGE
NO. 1
∗ 4 : w/ LEXUS Navigation System
E21
Data Link Connector 3
TC
CANL
CANH
E42(A), E44(C), E46(E), E48(G)
Junction Connector
B36
Park/Neutral
Position SW
RB
RL
R
E31
Steering Sensor
CANL
CANH
E62(A), E63(B), E64(C)
Multi–Display
+B1
IG
SPD
CANH
CANL
TC
REV
E35
Junction
Connector
E34(B)
Junction
Connector
B(∗4)
W(∗4)
SB(∗4)
SB
SB

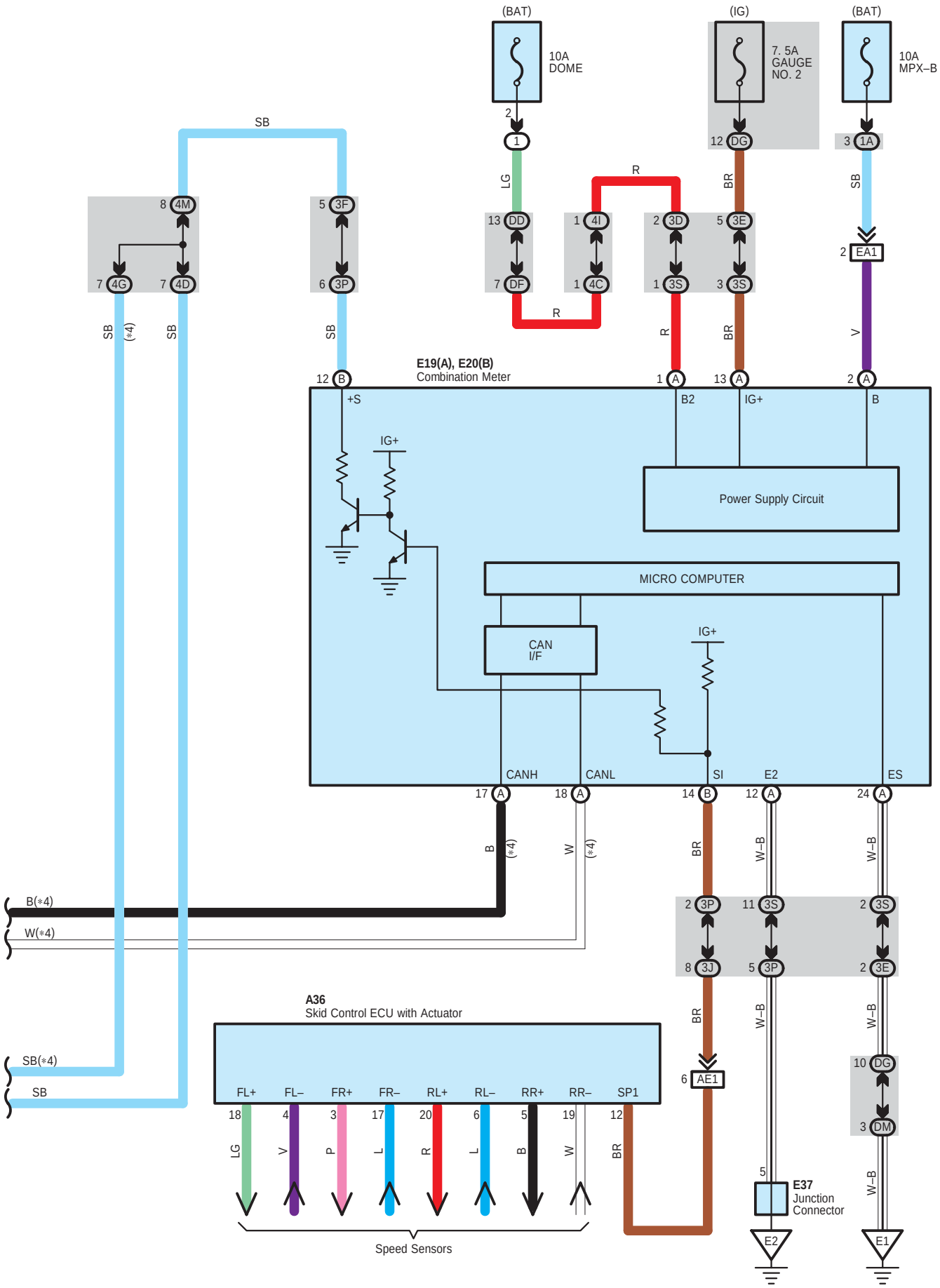
(BAT)
10A
DOME
(IG)
7. 5A
GAUGE
NO. 2
(BAT)
10A
MPX–B
SB
R
LG
BR
SB
8 4M
7 4G
7 4D
5 3F
6 3P
13 DD
7 DF
1 4I
1 4C
2 3D
1 3S
5 3E
3 3S
3 1A
2 EA1
SB
(*4)
SB
SB
R
R
BR
V
E19(A), E20(B)
Combination Meter
12 B
+S
1 A
B2
13 A
IG+
2 A
B
IG+
Power Supply Circuit
MICRO COMPUTER
CAN
I/F
IG+
CANH
CANL
SI
E2
ES
17 A
18 A
14 B
12 A
24 A
B
(*4)
W
(*4)
BR
W–B
W–B
B(*4)
W(*4)
2 3P
11 3S
2 3S
8 3J
5 3P
2 3E
A36
Skid Control ECU with Actuator
BR
W–B
W–B
SB(*4)
SB
6 AE1
10 DG
3 DM
FL+
FL–
FR+
FR–
RL+
RL–
RR+
RR–
SP1
18
4
3
17
20
6
5
19
12
LG
V
P
L
R
L
B
W
BR
5
E37
Junction
Connector
W–B
E2
E1
Speed Sensors

: Parts Location

Code		See Page	Code		See Page	Code		See Page
A32		60	E64	C	59	J5	B	63
A36		55	E69	A	59	J6		63
B36		57	E70	B	59	K5	A	63
E10		58	E71	C	59		B	63
E19	A	58	E72	D	59	K6		63
E20	B	58	E73	E	59	M11		62
E21		58	E74	F	59	M26		62
E30	A	58	E86		59	M27		62
E31		58	E87		59	M28	A	62
E34	B	58	E91	A	59		B	62
E35		58	E92	B	59	M29	A	62
E37		58	E94		59	M30	B	62
E42	A	48, 59	E95		59	M31	C	62
E44	C	48, 59	F4		61	M32	D	62
E46	E	48, 59	G2		61	Q2		64
E48	G	48, 59	H8		63	R15		65
E62	A	59	I7		63	d1	B	61
E63	B	59	J5	A	63			

: Relay Blocks

Code	See Page	Relay Blocks (Relay Block Location)
1	22	Engine Room R/B (Engine Compartment Left)

: Junction Block and Wire Harness Connector

Code	See Page	Junction Block and Wire Harness (Connector Location)
1A	24	Engine Room Main Wire and Engine Room J/B (Engine Compartment Left)
3D	36	Instrument Panel Wire and J/B No.3 (Instrument Panel Left)
3E		
3F		
3J		
3L		
3P		
3S		
4C	42	Instrument Panel Wire and J/B No.4 (Instrument Panel Right)
4D		
4E		
4G		
4I		
4J		
4L		
4M		
DC	30	Engine Room Main Wire and Instrument Panel J/B (Lower Finish Panel)
DD		
DF	30	Instrument Panel Wire and Instrument Panel J/B (Lower Finish Panel)
DG	31	
DH		
DM	30	

: **Connector Joining Wire Harness and Wire Harness**

Code	See Page	Joining Wire Harness and Wire Harness (Connector Location)
AE1	69	Engine Room Main Wire and Instrument Panel Wire (Instrument Panel Right)
AE3		
BA2	68	Engine Wire and Engine Room Main Wire (Inside of the Engine Room R/B and Engine Room J/B)
EA1	69	Instrument Panel Wire and Engine Room Main Wire (Left Kick Panel)
EF1	69	Instrument Panel Wire and Instrument Panel No.2 Wire (Under the Console Box)
EM3	69	Instrument Panel Wire and Floor No.2 Wire (Right Kick Panel)
EQ1	69	Instrument Panel Wire and Roof Wire (Front Pillar LH)
GE1	69	Instrument Panel No.3 Wire and Instrument Panel Wire (Instrument Panel Center)
HE1	69	Front Door RH Wire and Instrument Panel Wire (Right Kick Panel)
IE1	69	Front Door LH Wire and Instrument Panel Wire (Left Kick Panel)
JM1	70	Rear Door No.1 Wire and Floor No.2 Wire (Center Pillar RH)
KL1	70	Rear Door No.2 Wire and Floor Wire (Center Pillar LH)
LM1	70	Floor Wire and Floor No.2 Wire (Under the Rear Seat)
LR1	70	Floor Wire and Luggage Room Wire (Roof Side Rear Inner Panel LH)
MA1	69	Floor No.2 Wire and Engine Room Main Wire (Cowl Side Right)
ME1	69	Floor No.2 Wire and Instrument Panel Wire (Instrument Panel Right)

: **Ground Points**

Code	See Page	Ground Points Location
E1	69	Left Side of the Instrument Panel Reinforcement
E2	69	Instrument Panel Brace LH
E4	69	Instrument Panel Brace RH
M2	70	Roof Side Rear Inner Panel RH